Drawing

	Batch #	Appliance part#
Hendi B.V. Steenoven 21 3911 TX Rhenen The Netherlands	0000000	268506
	Description	
	Sausage rolling grill	

Date	05-06-2014	**Revision #**	Revision version
Revision	First bill of materials (BOM)		

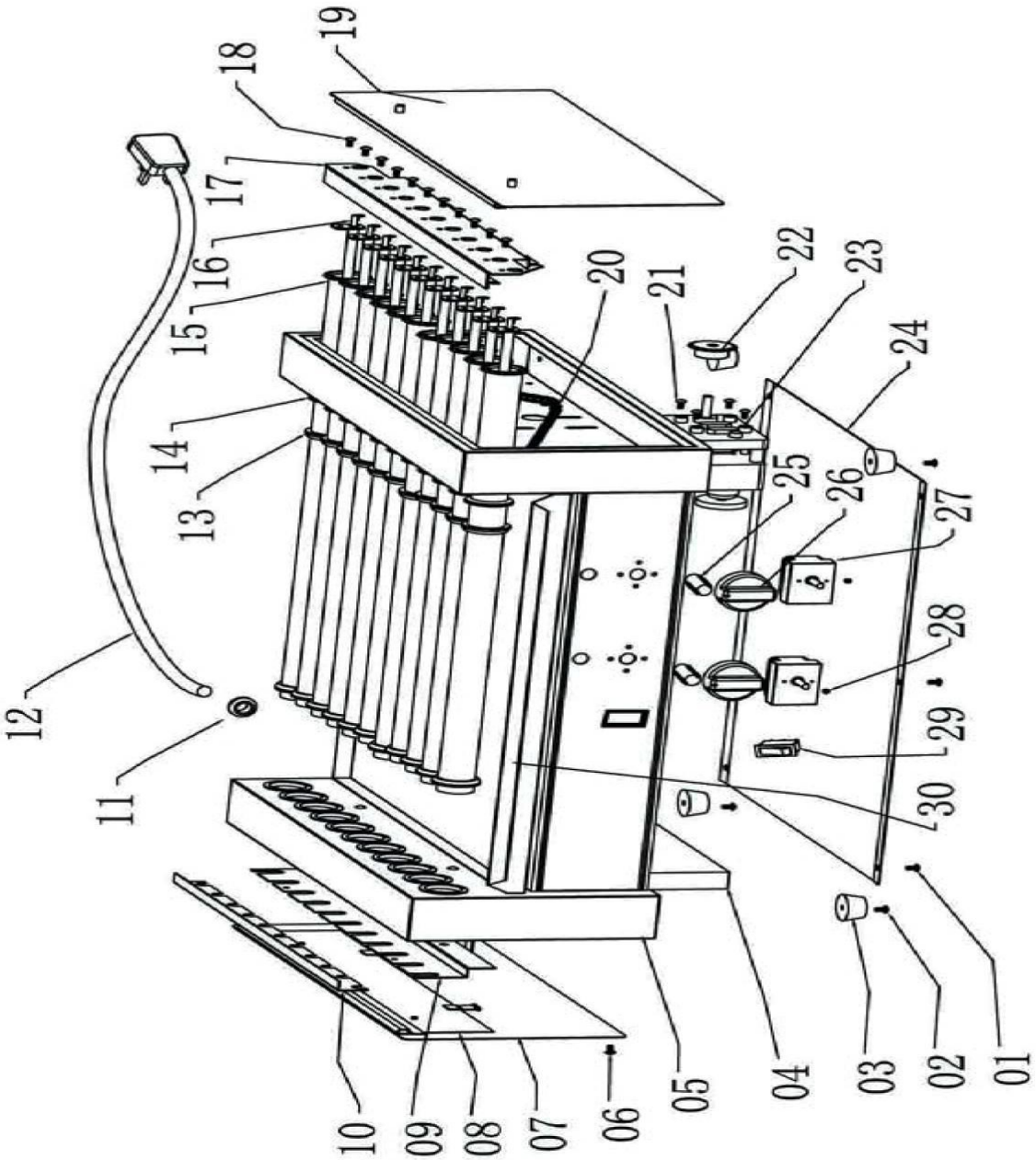

Bill of materials (BOM)

Hendi B.V.
Steenoven 21
3911 TX Rhenen
The Netherlands

Batch #	Appliance part#
0000000	268506

Description

Sausage rolling grill

Date	05-06-2014	**Revision #**	Revision version
Revision	First bill of materials (BOM)		

Item	Description	Part#	Quantity	Remark	Picture
1	Bolt	n/a	6		
2	Bolt	nss	4		
3	Foot	923429	4		
4	Insulation blanket	n/a	2		
5	Housing	n/a	1		
6	Screw	n/a	4		
7	Side cover (left)	n/a	1		
8	Insulation plate	n/a	1		
9	Support element	n/a	1		
10	Support element	n/a	1		
11	Cordinlet wih retention	912201	1		
12	Powercord (H05RN-F 3Gx1.0mm)	930038	1		
13	Angle ring	923436	14		
14	Tube pin	n/a	14		
15	Tube	n/a	7		
16	Element	923412	7		
17	Element holder	n/a	1		
18	Bolt	n/a	11		
19	Side cover (right)	n/a	1		
20	Chain	n/a	1		
21	Bolt	n/a	4		
22	Gear (motor)	923450	1		
23	Motor	n/a	1	See 932629 conversion kit	
24	Bottom cover	n/a	1		
25	Indicator light (heating)	912003	2		
26	Knob with graduation plate	921104	2		
27	Energie regulator	201121	2		
28	Screw	n/a	4		
29	Switch	902080	1		
30	Tray	926154	1		

n/a -> not available **nss -> not sold separately**

Circuit diagram

	Batch #	Appliance part#
Hendi B.V. Steenoven 21 3911 TX Rhenen The Netherlands	0000000	268506
	Description	
	Sausage rolling grill	
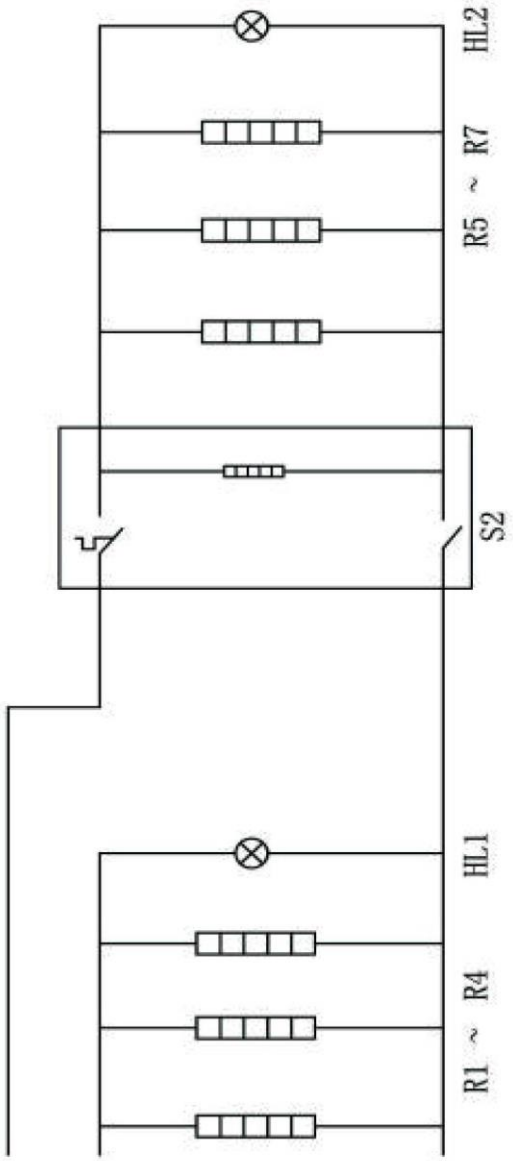
Date	05-06-2014	**Revision #**	Revision version
Revision	First bill of materials (BOM)